REVISIONS			
REV.	DESCRIPTION	DATE	APPROVED
-		-	

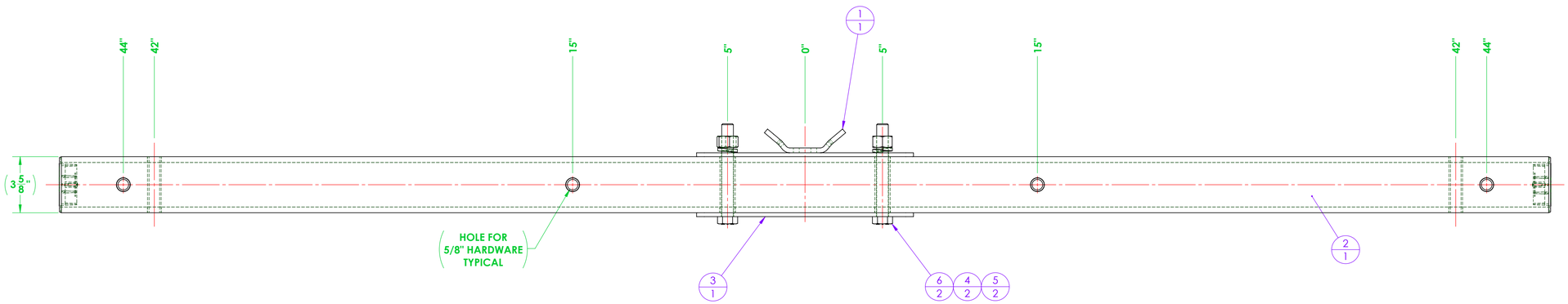

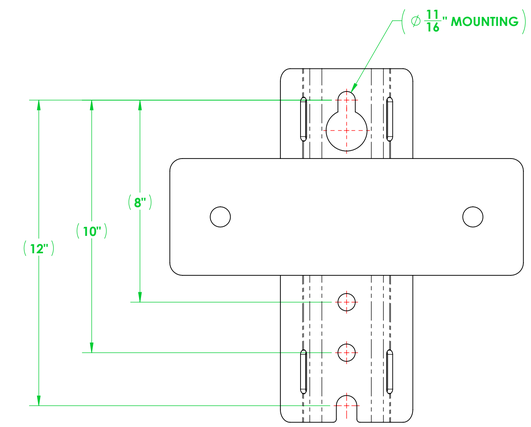

DETAIL A

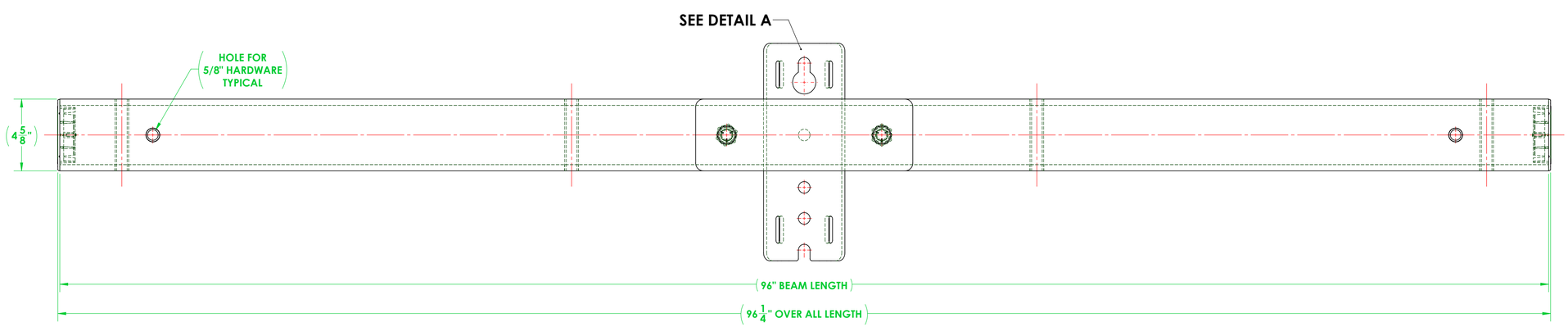

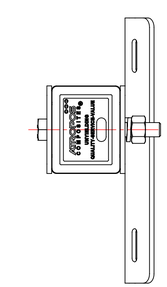

ITEM NO.	PART NUMBER	DESCRIPTION	QTY.
1	A713-0131	BRACKET, 5/8" HARDWARE, POLE MOUNTING, TANGENT, 3400 SERIES	1
2	3403A096-T011-X901 CA	ASSEMBLY, RUS, 3403 TANGENT CROSSARM, 8' LONG TYPE 3 DRILL PATTERN	1
3	A711-0012	PLATE, 4.625" X 3.625" CROSSARM MOUNTING, VERTICLE	1
4	A616-0042-01	LOCK WASHER, FOR 3/4" SCREW, 0.766" ID, 1.265" OD, 0.188" THICK, HOT-DIPPED GALVANIZED STEEL	2
5	A616-0019-02	EXTREME STRENGTH NUT, HEX, 3/4"-10, 2H, HOT-DIPPED GALVANIZED	2
6	A616-0020-02	BOLT, HEX, 3/4"-10 X 6.00" LONG, HOT DIPPED GALVANIZED STEEL, 1-1/8" DRIVE	2

GENERAL NOTES

UNLESS OTHERWISE SPECIFIED
DIMENSIONS ARE IN INCHES
STANDARD TOLERANCES
FRACTIONAL: ±1/32
ANGULAR:
MACHINED ±0.5° BEND: ±2°
TWO PLACE DECIMAL: ±0.03
THREE PLACE DECIMAL: ±0.005
INTERPRET GEOMETRIC TOLERANCING PER: ANSI Y14.5
MATERIAL
-
FINISH
-
DO NOT SCALE DRAWING

	NAME	DATE
DRAWN	F. BRYANT	10/13/2025
CHECKED	TJS	10/21/2025
ENG APPR.		
MFG APPR.		
Q.A.		

PROPRIETARY AND CONFIDENTIAL

THE INFORMATION CONTAINED IN THIS DRAWING IS THE SOLE PROPERTY OF VELTURIS. ANY REPRODUCTION IN PART OR AS A WHOLE WITHOUT THE WRITTEN PERMISSION OF VELTURIS IS PROHIBITED.

ATROPOS COMPOSITES
12208 MISSOURI BOTTOM ROAD, HAZELWOOD, MO 63042
PHONE: 314.714.4001 FAX: 314.895.1943
SALES@LABYRINTH-TECH.COM

TITLE:
ASSEMBLY, TANGENT, 3403, (4) WIRE, 8 FT.

SIZE D | DWG. NO. 3403A096-T011-X901 | REV -

SCALE: 1:8 | WEIGHT: 73.52 | SHEET 1 OF 1